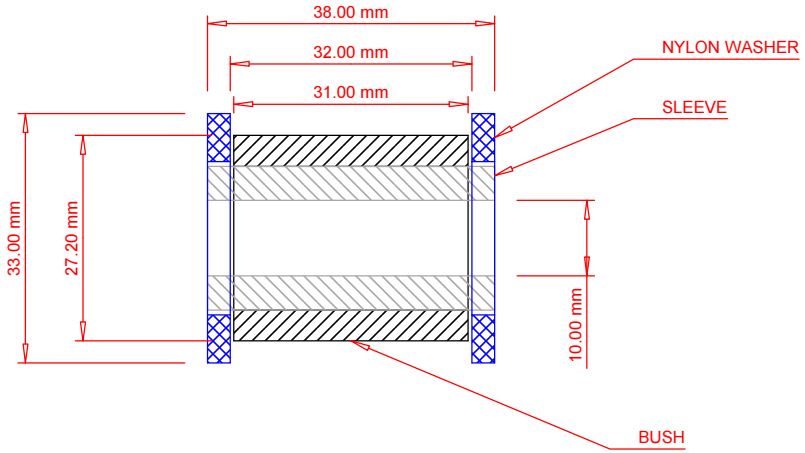

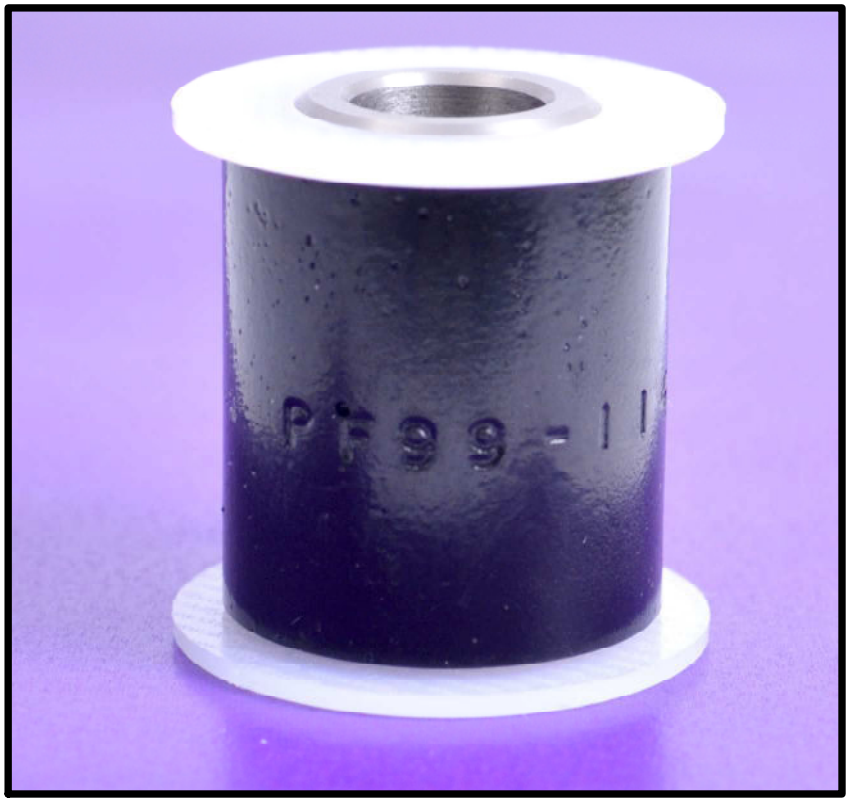

BUSH		
1.	MATERIAL	POLYURETHANE SHORE A 95
2.	COLOUR	BLACK
3.	BORE FINISH	KNURLED BORE
4.	KIT QUANTITY	1
SLEEVE		
1.	MATERIAL	STAINLESS STEEL
2.	LENGTH	38MM
3.	BORE	10MM
4.	KIT QUANTITY	1
TUBE & MOUNTING		
1.	TO SUIT BORE	1 1/16", 26.9MM TO 27.1MM
2.	TO SUIT WIDTH	31MM
3.	TO SUIT MOUNTING LENGTH	38MM
4.		
WASHER		
1.	MATERIAL	NYLON
2.	DIAMETER	33MM
3.	THICKNESS	3MM
4.	KIT QUANTITY	2

No.	REVISION	BY	CHKD	DATE
0	ORIGINAL ISSUE	P.S.		25/6/12

DESCRIPTION

KIT CAR BUSH, CATERHAM
38MM LONG, 10MM BOLT

© COPYRIGHT. ALL RIGHTS RESERVED
THIS DRAWING IS STRICTLY CONFIDENTIAL AND MUST NOT BE COPIED, REPRODUCED OR ADAPTED, NOR MAY ARTICLES BE MANUFACTURED IN ACCORDANCE WITH THE DRAWING WITHOUT PRIOR WRITTEN PERMISSION OF POWERFLEX.

POWERFLEX
EPTG LTD

MATERIAL: POLYURETHANE SHORE A 95

DRAWING No.: 99-115-10

REV: 0